Accessibility for Ontarians with Disabilities Act (AODA)
Plan List by each MCI Clinic Location

Each MCI The Doctor's Office location performed a site audit of all barriers within the clinics. Below is a chart that indicates each barrier by location and an intended completion date for a remedy for the barrier.

Clinic Location	Barrier	Completion Date
Aches & Pains Physiotherapy *Within* MCI Royal Bank Plaza P.O. Box 134 200 Bay Street, Unit LR8 Toronto, Ontario M5J 2J3	1) Reception desk does not accommodate wheelchair 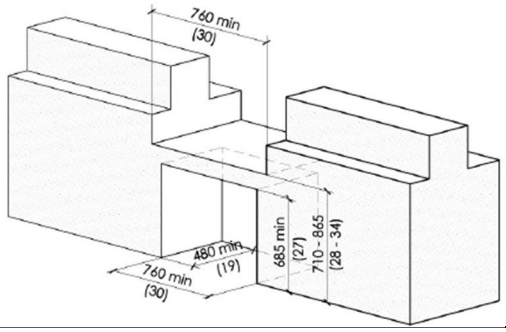	TBD
MCI Atrium on Bay 595 Bay Street Toronto, Ontario M5G 2C2	1) Front door does not have automatic push button open 2) Adjust heights of items such as coat hooks inside Exam rooms 3) Replace door handles from orbits to lever style 4) Reception desk does not accommodate wheelchair access 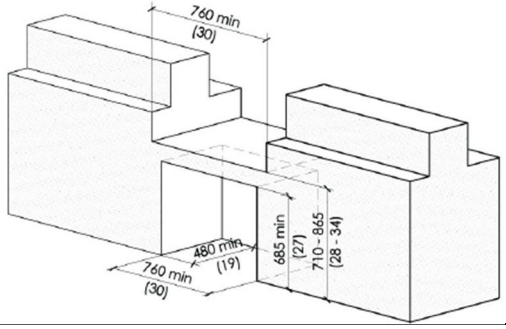	TBD
Atrium Physiotherapy *Within* MCI Atrium on Bay 595 Bay Street Toronto, Ontario M5G 2C2	1) Private physio treatment rooms do not have barrier free space to be able to maneuver	TBD

MCI Bloor Street 345 Bloor St E, Suite 4A Toronto, Ontario M4W 3J6	1) Front door does not have automatic push button open 2) Adjust heights of items such as coat hooks inside Exam rooms 3) Reception desk does not accommodate wheelchair access 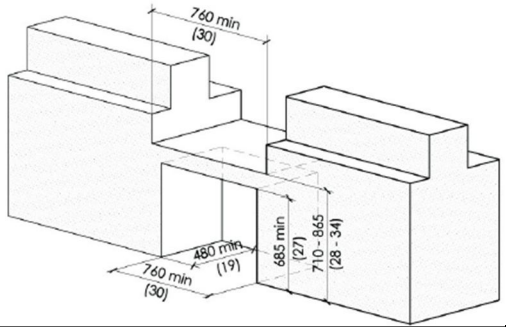	TBD
MCI Bramalea City Centre 25 Peel Centre Drive Main Floor, Suite 387 Brampton, Ontario L6T 3R5	1) Front door does not have automatic push button open 2) Adjust heights of items such as coat hooks inside Exam rooms 3) Reception desk does not accommodate wheelchair access 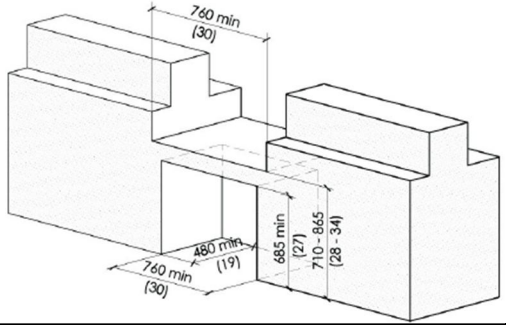	TBD
MCI Jane Street 3869 Jane Street Downsview, Ontario M3N 2K1	1) Adjust heights of items such as coat hooks inside Exam rooms 2) Replace door handles from orbits to lever style 3) Reception desk does not accommodate wheelchair access 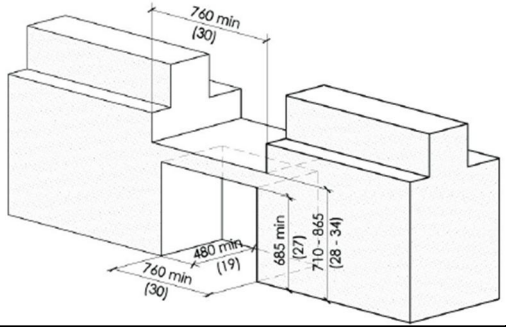	TBD

MCI Kennedy 2251 Lawrence Ave E Scarborough, Ontario M1P 2P5	1) Patient washroom mirror to be lowered to allow individuals in wheelchairs to use 2) Reception desk does not accommodate wheelchair access 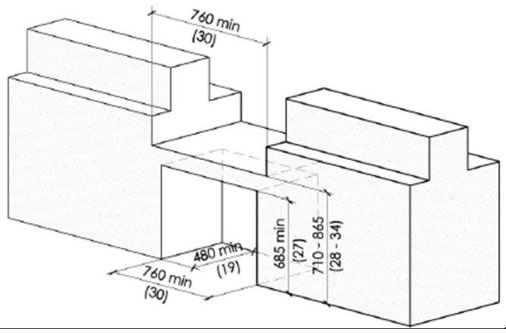	TBD
MCI Main Exchange 800 Steeles Ave W, Suite 4A Thornhill, Ontario L4J 7L2	1) Top floor door does not have automatic push button entrance door 2) Washrooms a. Move existing grab bars b. Move existing towel dispenser c. Move existing coat hook 3) Stairs to have handrails on both sides, currently on one side has 4) Reception desk does not accommodate wheelchair access 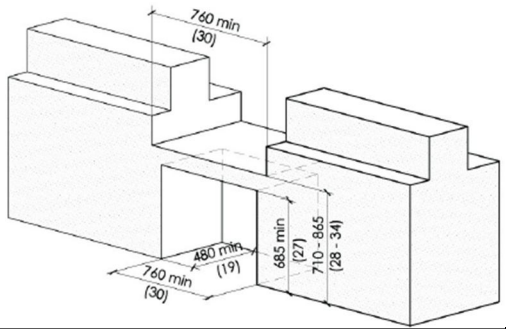	TBD

MCI Meadowvale 6435 Erin Mills Pkwy Mississauga, Ontario L5N 3P3	1) Adjust heights of items such as coat hooks inside Exam rooms 2) Reception desk does not accommodate wheelchair access 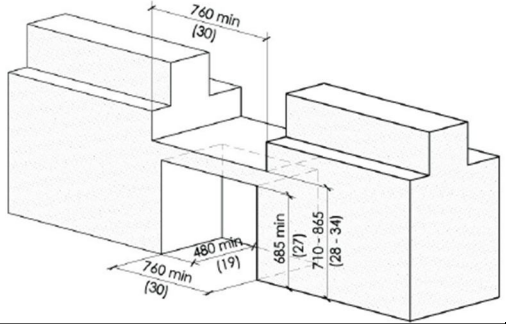	TBD
MCI Michael Angelos 4099 Erin Mills Pkwy Mississauga, Ontario L5N 3P9	1) Front door does not have automatic push button open 2) To install grab bars for barrier free washroom toilet 3) Replace door handles from orbits to lever style 4) Reception desk does not accommodate wheelchair access 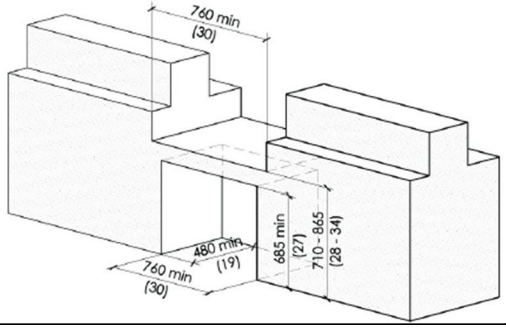	TBD
MCI Mt Pleasant 245 Eglinton Ave E Toronto, Ontario M4P 3B7	1) Barrier free washroom, to move grab bars for toilet 2) Reception desk does not accommodate wheelchair access 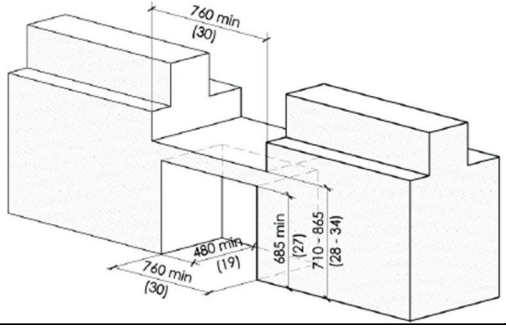	TBD

MCI Oakville 1011 Upper Middle Rd E Oakville, Ontario L6H 4L1	1) Barrier free washroom, relocate grab bars, coat hooks and paper dispensers	TBD
MCI Richview 250 Wincott Dr, Unit 12 Etobicoke, Ontario M9R 2R5	1) Front door does not have automatic push button open 2) Back door to have panic bar installed 3) Controls (light switches) to be installed at proper height 4) Washroom at clinic is not barrier free in dimensions 5) Reception desk does not accommodate wheelchair access 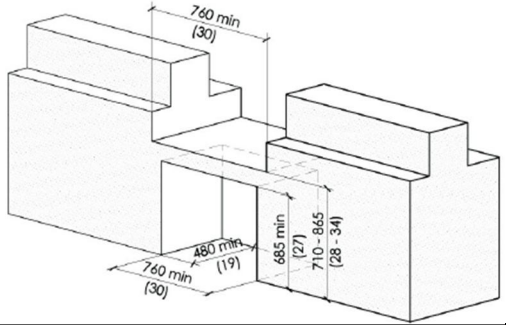	TBD
MCI Scarborough 325 Bamburgh Circle Scarborough, Ontario M1W 3Y1	1) Front door does not have automatic push button open 2) Barrier free washroom, need to adjust heights of coat hooks, dispensers, and mirror 3) Reception desk does not accommodate wheelchair access 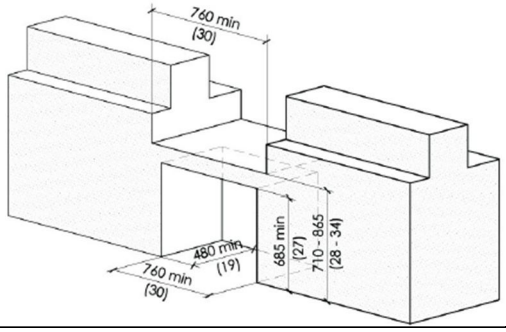	TBD

MCI Thornhill Square 300 John Street, Unit 203 Thornhill, Ontario L3T 5W4	1) Front door does not have automatic push button open 2) Reception desk does not accommodate wheelchair access 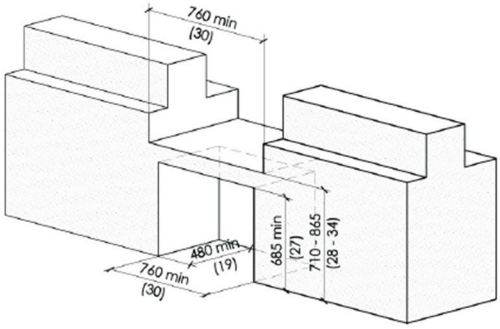	TBD
MCI Whitby 80 Thickson Road S Whitby, Ontario L1N 7T2	1) Front door does not have automatic push button open 2) Emergency exit door needs to have panic bar installed 3) Replace door handles from orbits to lever style 4) Barrier free washroom, to adjust heights of mirror, grab bars, dispensers 5) Stairs to have handrails on both sides 6) Reception desk does not accommodate wheelchair access 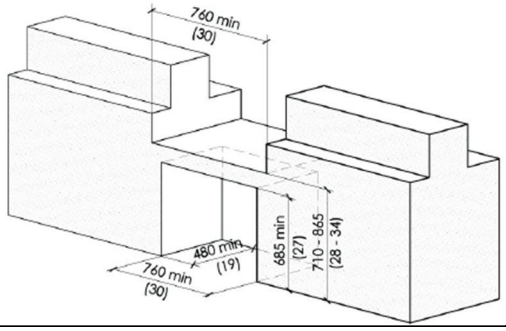	TBD

MCI Woodbridge 205 Marycroft Ave, Unit 13 Woodbridge, Ontario L4L 5X8	1) Front door does not have automatic push button open 2) Replace door handles from orbits to lever style 3) Reception desk does not accommodate wheelchair access 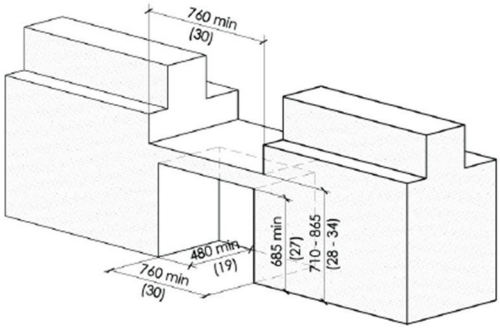	TBD